HAIGHT® PUMPS
DIVISION OF: BAKER MANUFACTURING COMPANY

133 Enterprise Street • Evansville, WI 53536
Phone: 800-871-9250 • Fax: 608-882-3777

5E Pump & Motor Assembly

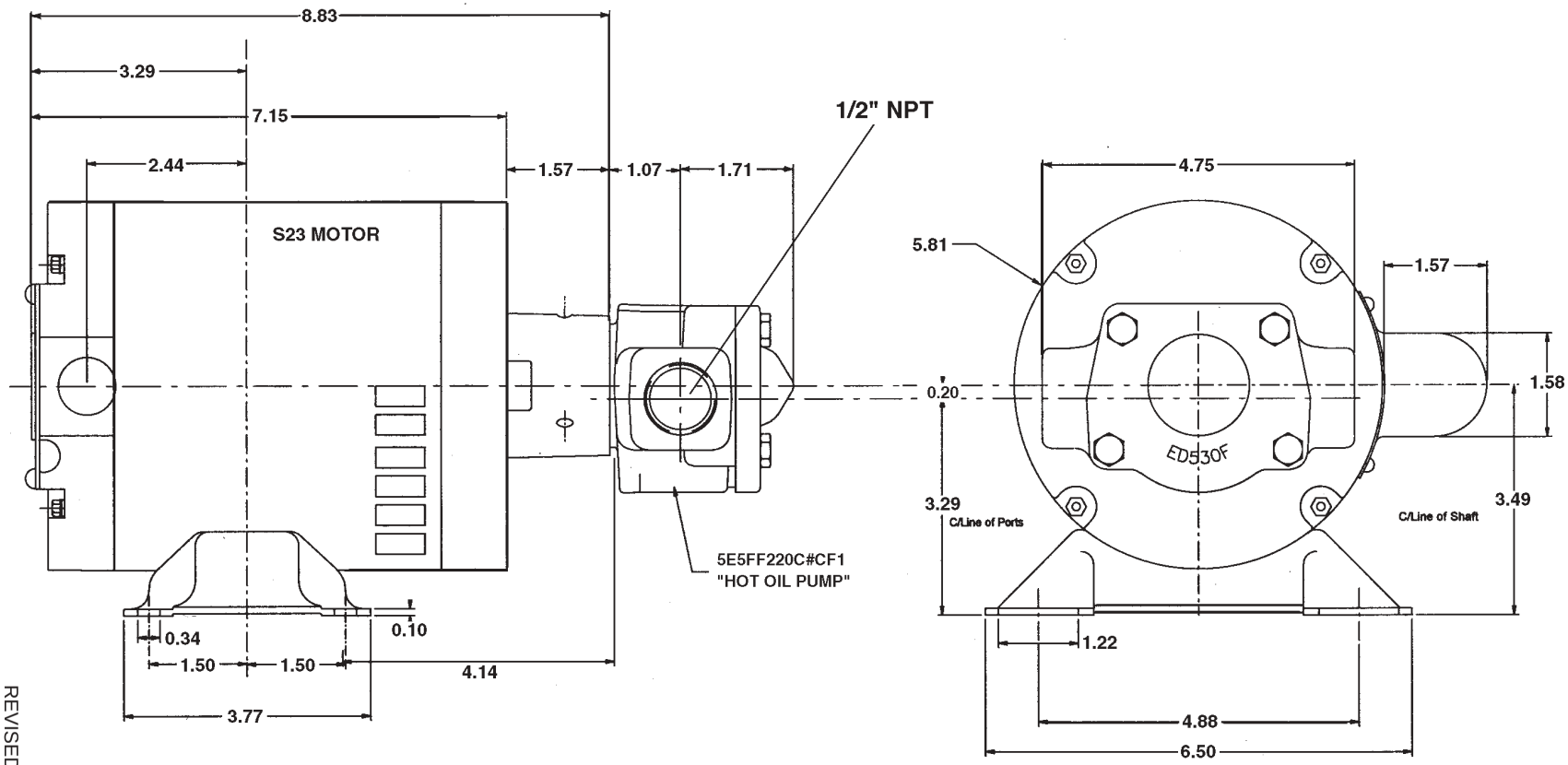

Right Side

Front View

REVISED 2-1-02